TOTO

Specification Sheet

TX447SNBR

IDR 6,640,000.00

4 Holes Bath & Shower Set

Min Water Pressure: 0.05 MPa

Max Water Pressure: 0.75 MPa

Flow Rate: 8.0 Lpm

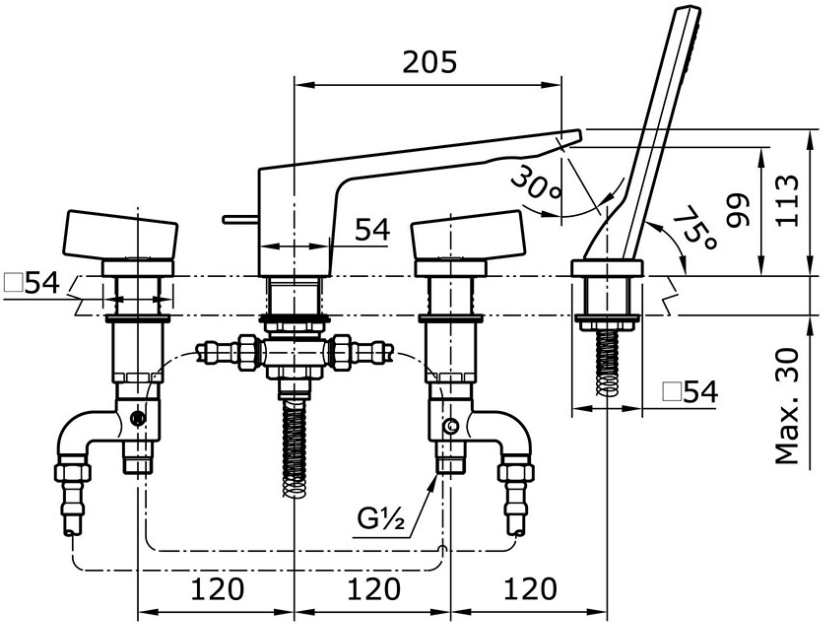

Some products may not be available in your area
Prices indicated are manufacturer's suggested retail price, prices may change anytime without notice.
Please check with your nearest reseller for updated prices.
Prices shown for lavatory does not include faucet.